IF IN DOUBT ASK ..... ENGINEERING

R

DO NOT SCALE THE DRAWING

ALL DIMENSIONS ARE IN mm UNLESS OTHERWISE STATED

REMOVE ALL BURRS AND SHARP EDGES

UNMENTIONED TOLERANCES

LINEAR DIMENSIONS (MACHINED)	ABOVE	0	6	315	1000
	UPTO	6	315	1000	2000
	TOL.	±0.2	±0.5	±0.8	±1.2
ANGLES		± 1/2°			

ALL INFORMATION CONTAINED IN THIS DOCUMENT IS CONFIDENTIAL AND THE PROPERTY OF KIRLOSKAR ELECTRIC CO.LTD, REPRODUCING OF THESE IN ANY FORM IS TO BE DONE WITH THE SPECIFIC PERMISSION OF THE COMPANY.

DIMENSION DRAWING

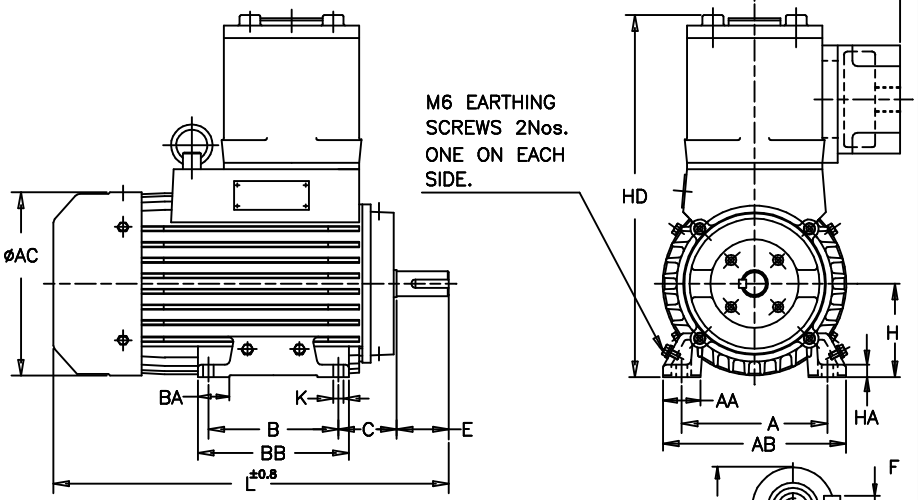

1. DIMENSIONS ARE AS PER IS:1231.
2. DEGREE OF PROTECTION: IP55.
3. PROTECTED CENTRE HOLE M8X20 FOR LE90, M10X24 FOR LE100
4. TOLERENCE ON H IS +0.0/−0.5.
5. KEY & KEYWAY DIMENSIONS ARE AS PER IS:2048.
6. TOLERENCE ON KEYWAY IS P9.

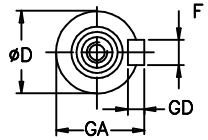

EXTENSION DETAILS

TERMINAL BOX ARRANGEMENT

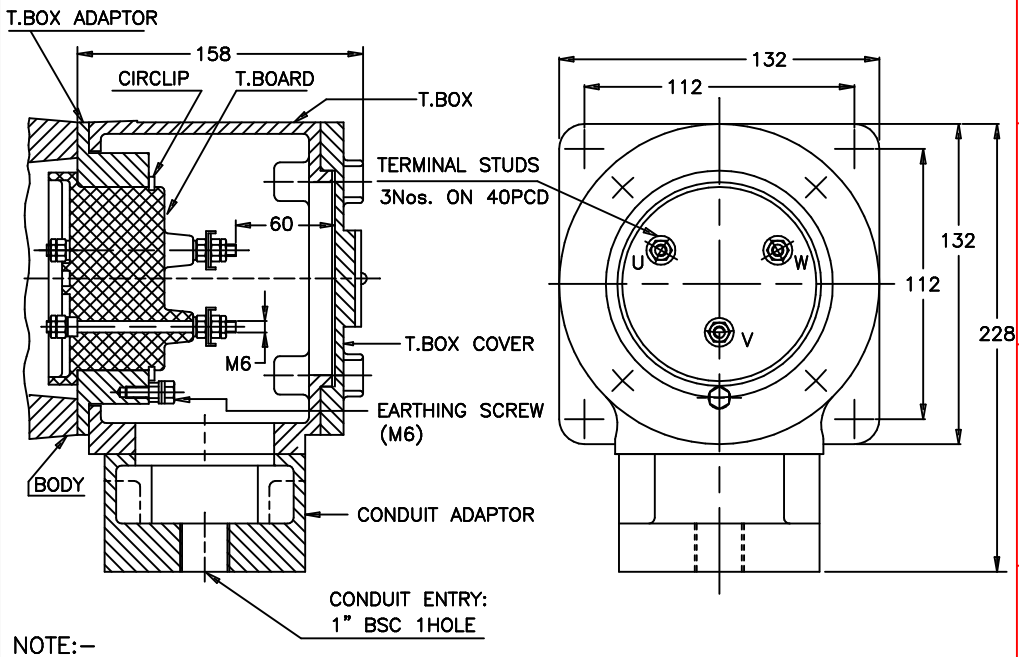

NOTE:−

1) CABLE SIZE :− LF90 & 100 − 1X4CX10Sq.mm (MAX)

ITEM/TAG No.				
RATING				
CABLE SIZE				
O/A NO.:		CUSTOMER :		
PROJECT :		CONSULTANT :		JOB No. :

SL	Frame	A	AA	AB	øAC	AD	B	BA	BB	C	D	E	F	GA	GD	H	HA	HD	øK	L
1	LF 90	140	36	176	177	145	125	36	145	56	24^{j6}	50	8	27	7	90	12	360	10	380
2	LF 100	160	40	200	194	145	140	40	170	63	28^{j6}	60	8	31	7	100	12	377	12	420

Z122167000MK

SURFACE ROUGHNESS (MAX) AS PER KSD-02-027

Ra µm	50	12.5	25	1.6	3.2	6.3	0.2	0.4	0.6	0.8	0.025	0.05	0.1
OLD													
NEW													

UNMENTIONED

CHAM:

UC:

RAD:

REV.	ZONE	DCN.No.	BRIEF RECORD	SIGNATURE	DATE	PRINTS ISSUED TO

THIS SUPERSEDES ..... FROM dt ..... AS PER DCN No.....

THIS SUPERSEDED BY ..... FROM dt. ..... AS PER DCN No.....

MATERIAL SPECIFICATION	RAW MATERIAL SIZE	WEIGHT kg RM	FIN.
—	—	—	—

CASTING/FAB REF. —— No.P.S.:—

SCALE NTS

USED ON

LF90 & 100

DRAWN	CHECKED	STANDARD	APPROVED
dt.	dt.	dt.	dt.

TITLE:

DIMENSION SHEET

32216709

SHEET ONE OF ONE

KIRLOSKAR ELECTRIC COMPANY LTD. HUBLI−580030 (INDIA)

FORM No. 02 201 028 (ISSUE 7)